STRONG | Google TV

LEAP-S3

4K UHD Streaming TV Box



Installation instruction
Installationsanleitung
Instruction d'installation
Istruzioni per l'installazione
Instrucciones de instalación
Instruções de instalação
Installatie instructies
Installationsvejledning
Pokyny k instalaci
Pokyny k inštalácii
Upute za instalaciju
Telepítési utasítás
Инструкция за инсталиране
Інструкція з монтажу

WIRELESS · Dolby VISION·ATMOS · HDMI HIGH-DEFINITION MULTIMEDIA INTERFACE · 4K Ultra HD

www.strong-eu.com



1



2

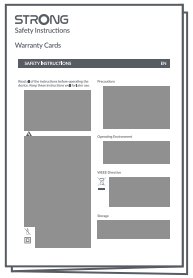

3

Manual: www.strong-eu.com



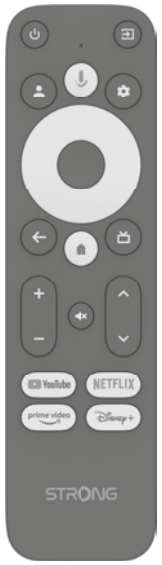



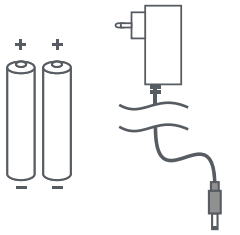



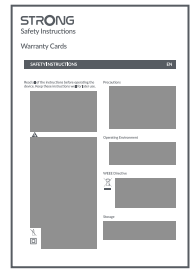

SERVICE CENTER

AT	support_at@strong-eu.com 0820 400 150 (€ 0,12/Min. österr. Festnetz)	FR	support_fr@strong-eu.com
BG	support_bg@strong-eu.com +359 32 634451	IT	support_it@strong-eu.com
CEE	support_hu@strong-eu.com +36 1 445 26 10	NL	support_nl@strong-eu.com
DE	support_de@strong-eu.com 0800 7788 787 (Gebührenfrei)	PL	support_pl@strong-eu.com 801 702 017
DK	support_dk@strong-eu.com	UA	support_ua@strong-eu.com +380 (44) 238 61 50

Supplied by STRONG Austria
Represented by STRONG Ges.m.b.H.
Teinfaltstraße 8/4.Stock
A-1010 Vienna, Austria
Email: support_at@strong-eu.com



22 PAP

20 septembre 2024 11:34

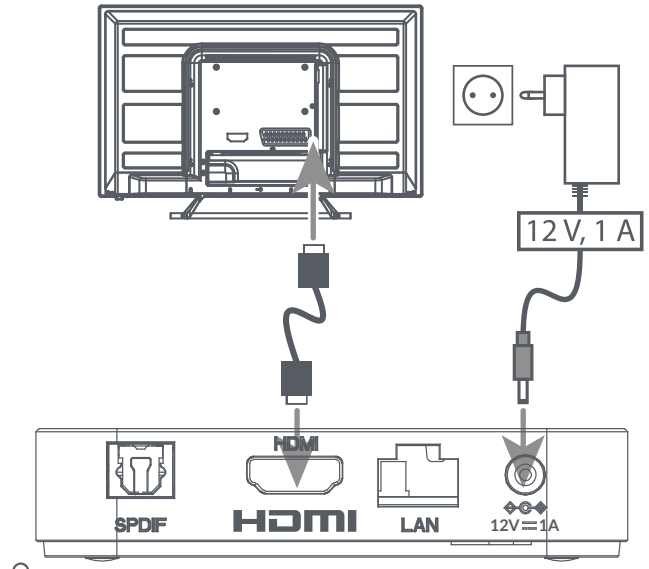

0 ~ +40 °C (in operation)

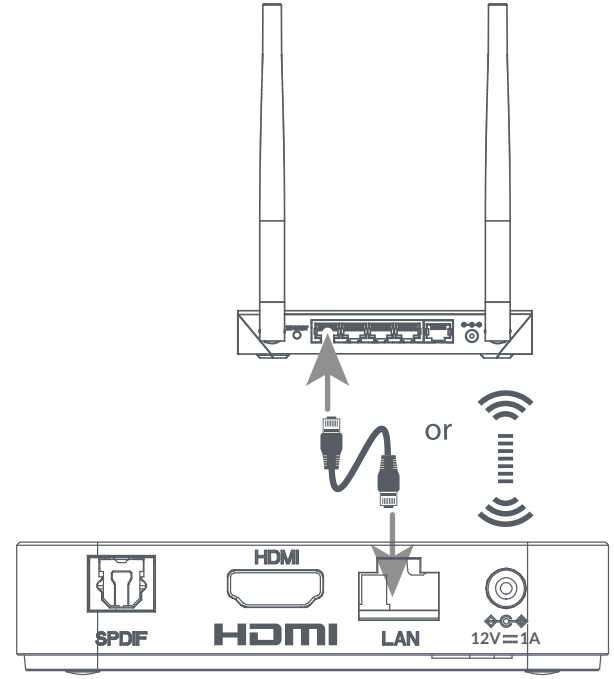

Wi-Fi: 802.11 b/g/n/ac, 2.4 & 5.0 GHz

Optional:

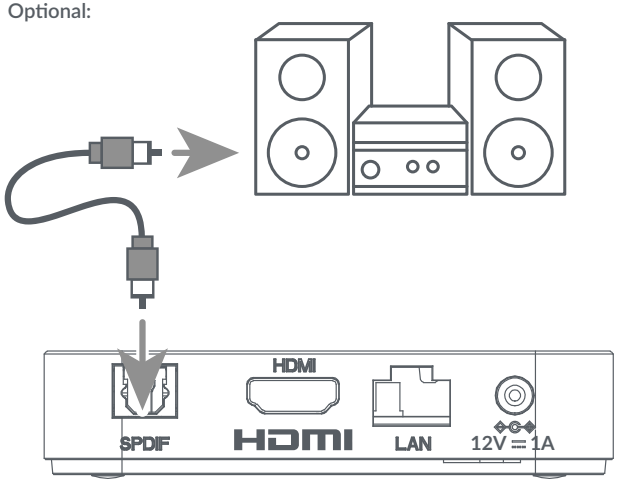

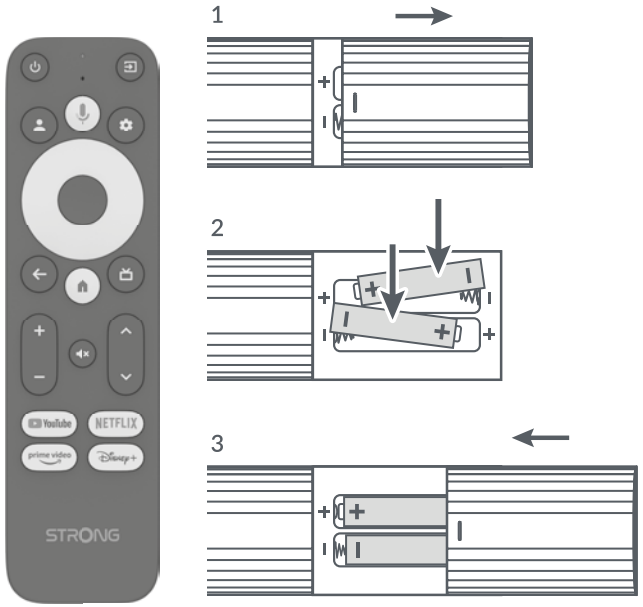

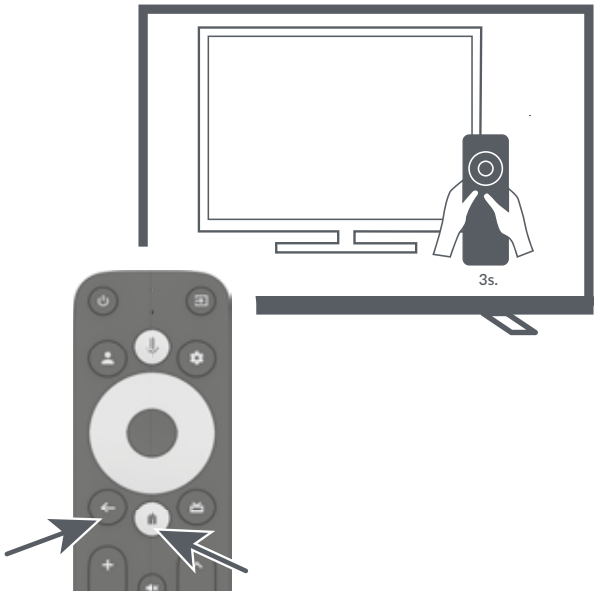

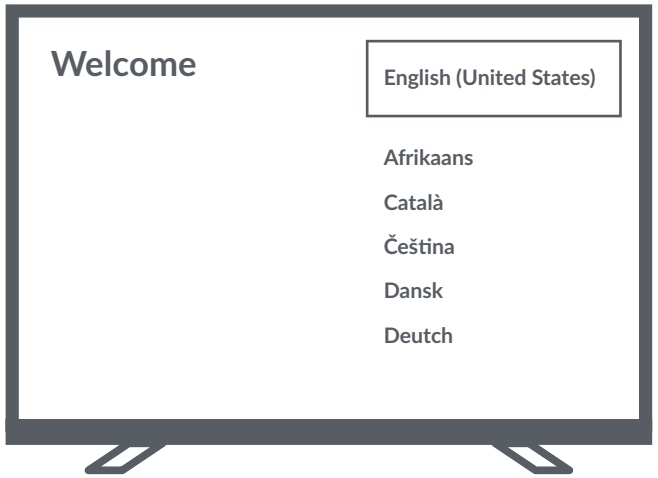

Licenses:

THIS PRODUCT IS SOLD WITH A LIMITED LICENSE AND IS AUTHORIZED TO BE USED ONLY IN CONNECTION WITH HEVC CONTENT THAT MEETS EACH OF THE THREE FOLLOWING QUALIFICATIONS: (1) HEVC CONTENT ONLY FOR PERSONAL USE; (2) HEVC CONTENT THAT IS NOT OFFERED FOR SALE; AND (3) HEVC CONTENT THAT IS CREATED BY THE OWNER OF THE PRODUCT. THIS PRODUCT MAY NOT BE USED IN CONNECTION WITH HEVC ENCODED CONTENT CREATED BY A THIRD PARTY, WHICH THE USER HAS ORDERED OR PURCHASED FROM A THIRD PARTY, UNLESS THE USER IS SEPARATELY GRANTED RIGHTS TO USE THE PRODUCT WITH SUCH CONTENT BY A LICENSED SELLER OF THE CONTENT. YOUR USE OF THIS PRODUCT IN CONNECTION WITH HEVC ENCODED CONTENT IS DEEMED ACCEPTANCE OF THE LIMITED AUTHORITY TO USE AS NOTED ABOVE.

SIMPLIFIED EU DECLARATION OF CONFORMITY

Hereby, STRONG declares that LEAP-S3 is in compliance with Directive 2014/53/EU.
The full text of the EU declaration of conformity is available at the following internet address: https://eu.strong-eu.com/downloads/
The functions of Wireless Access Systems including Radio local Area Networks (WAS/RLANs) within the band 5150-5350 MHz for this device are restricted to indoor use only within European Union Countries (BE/BG/CZ/DK/DE/EE/IE/EL/ES/FR/HR/IT/CY/LV/LU/HU/MT/NL/AT/PL/PT/RO/SI/SK/FI/SE/UK(NI)/TR/NO/CH/IS/LI/LT).
Frequency band:
2400MHz-2483.5MHz/5150MHz-5250MHz/5250MHz-5350MHz/5470MHz-5725MHz
Transmit Power: RFmax.power:<20dBm
Frequency band: 5725MHz-5850MHz
Transmit Power: RFmax.power:<13.98dBm
AT/GER: Die Nutzung innerhalb von 5150-5350 MHz ist auf geschlossenen Gebäuden beschränkt
Subject to alterations. In consequence of continuous research and development technical specifications, design and appearance of products may change. Google TV is the name of this device's software experience and a trademark of Google LLC. Google, YouTube and Chromecast built-in are trademarks of Google LLC. Google Assistant is not available in certain languages and countries. Availability of services varies by country and language. The terms HDMI, HDMI High-Definition Multimedia Interface, HDMI Trade dress and the HDMI Logos are trademarks or registered trademarks of HDMI Licensing Administrator, Inc. Manufactured under license from Dolby Laboratories. Dolby, Dolby Vision, Dolby Atmos, and the double-D symbol are registered trademarks of Dolby Laboratories Licensing Corporation. Covered by one or more claims of the HEVC patents listed at patentlist.accessadvance.com. All other product names are trademarks or registered trademarks of their respective owners.© STRONG 2024. All rights reserved.

Data Protection:

Please be aware that STRONG, its manufacturing partners, the application providers and the providers of the services may collect and use technical data and related information, including but not limited to technical information about this device, system and application software and peripherals. STRONG, its manufacturing partners, the application providers and the providers of the services may use such information to improve its products or to provide services or technologies to you, as long as it is in a form that does not personally identify you.
Additionally, please keep in mind that some services provided - already in the device or installed by you-may request a registration for which you have to provide personal data.
Beside that, please be aware that some services which are not pre-installed but can be installed may collect personal data even without providing additional warnings and that STRONG cannot be held liable for a possible breach of data protection by services not pre-installed.