Caffitaly system	Product specification **S36 VOLTA Caffitaly System**	File Name: **PS360020911**

Description : S36 VOLTA Black Caffitaly System 220-240V 50-60Hz 1450W Schuko plug
SAP Code : 35360020911
Model : S36 VOLTA
Color : Black
Power Supply : 220-240V 50Hz 1450W
Power Cord : European “Schuko” Power Cord

Branding & Silk-Screen :

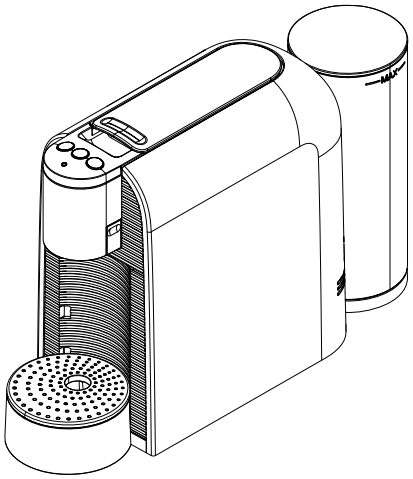

Gift Box code : GB3600400
User Manual code: IB36000100
Warranty Card code : CW0000100
Approval : CE DEKRA
Notes : in compliance with the commission regulation (EU) n 801/2013.

Revision History :

Revision	Primary Autor (s)	Description of version	Date
00	Matteo Magnani	First issue	17/04/2023
01	Matteo Magnani	Correct main power code 34000674800	17/07/2023
02	Matteo Magnani	Updated rating label (new logo DEKRA MARK)	05/12/2023
03	Matteo Magnani	Updated drawing keyboard	12/02/2024
04	Matteo Magnani	Updated gift box	30/10/2024
05	Matteo Magnani	Updated gift box	26/11/2024
06	Matteo Magnani	Updated gift box	13/01/2025
07	Matteo Magnani	Updated pump	17/03/2025

Rating Label :

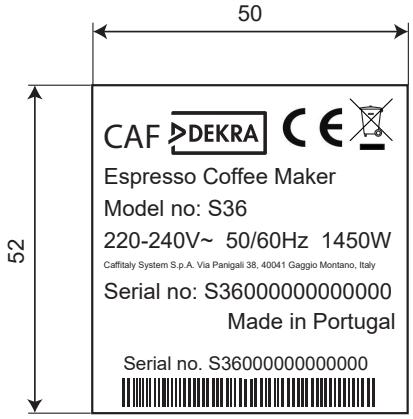

Gift Box Label :

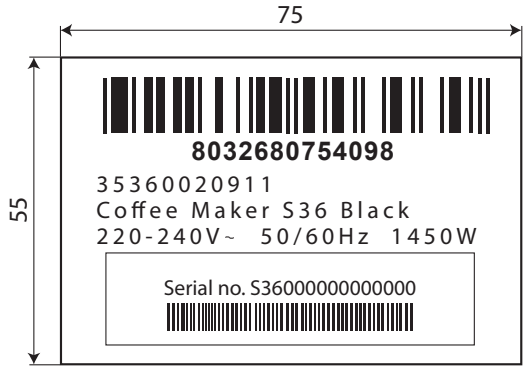

Serial number Labels :



Material : Adhesive PET
Thickness : 0.025 ± 0.003 mm
Colour of label : White
Colour of Ink : Black
Printing Resistance : See paragraph 7 of EN60335-1

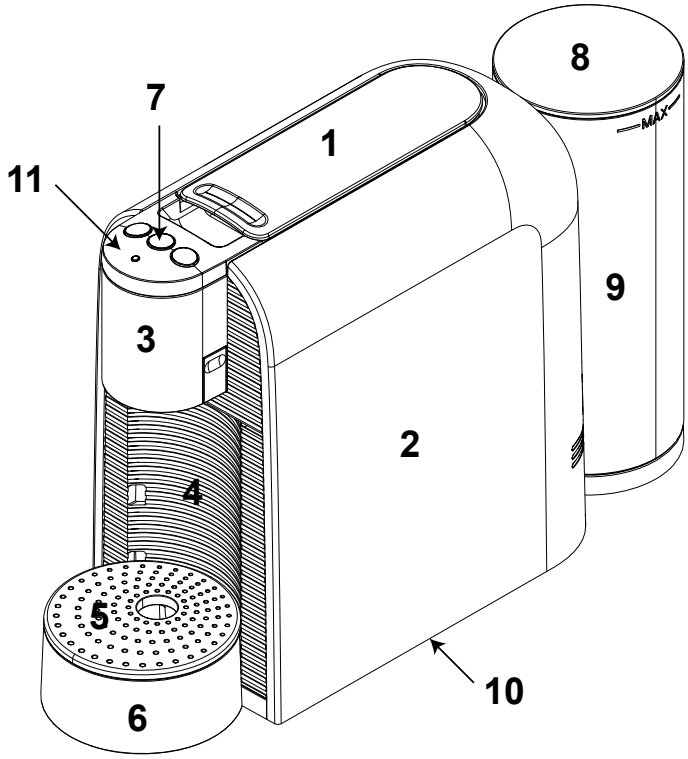

Materials, colors & finishing:

Ref	Description	Material	Moulding color	Moulding finishing	Painting color	Painting finishing
1	BM handle	ZAMAK	Natural	Polished	Matt Black RAL9005	Standex K7000G
2	Main cover	ABS	Black RAL 9005	Mirror polished	----------	----------
3	Cover coffee dispenser	ABS	Black RAL 9005	Standex K7000G	----------	----------
4	Capsule drawer	ABS	Black RAL 9005	Standex K7000G	----------	----------
5	Drip tray grid	ABS	Black RAL 9005	Standex K7000G	----------	----------
6	Drip tray	ABS	Black RAL 9005	Standex K7000G	----------	----------
7	Keyboard	Silicone	Milky	----------	Black laser engraved	MATT
8	Water tank lid	SAN	Trasparent	Mirror polished	----------	----------
9	Water tank	SAN	Trasparent	Mirror polished	----------	----------
10	Lower base	ABS	Black RAL 9005	Standex K7000G	----------	----------
11	Top cover	ABS	Black RAL 9005	Standex K7000G	----------	----------

Branding &
Silk-Screen :

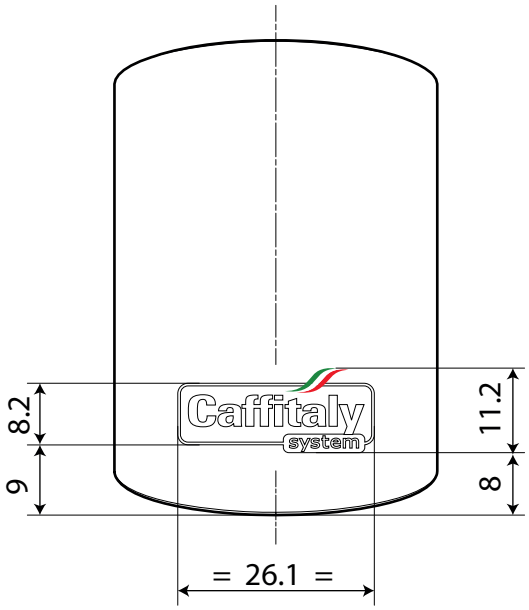

Position labels on the
coffee machine:

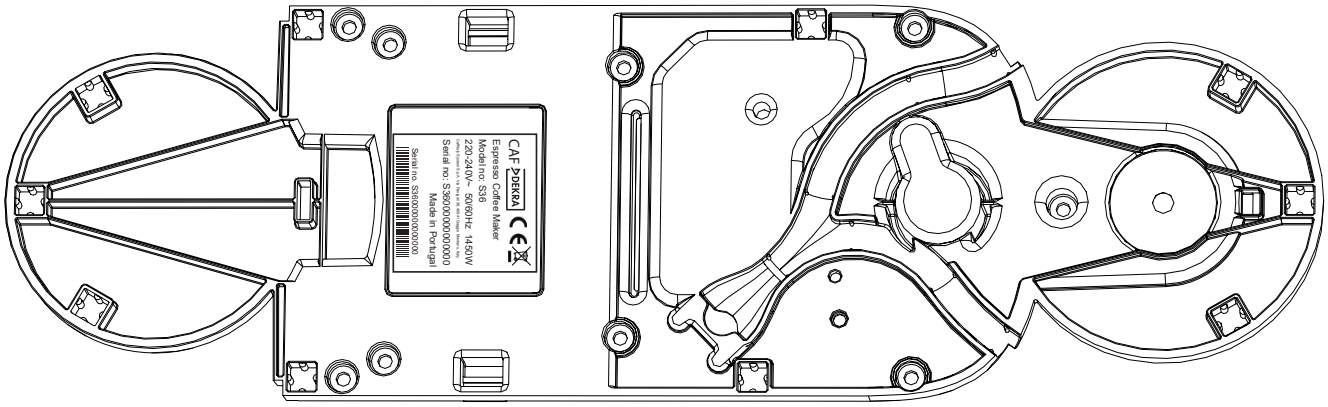

Keyboard S36:

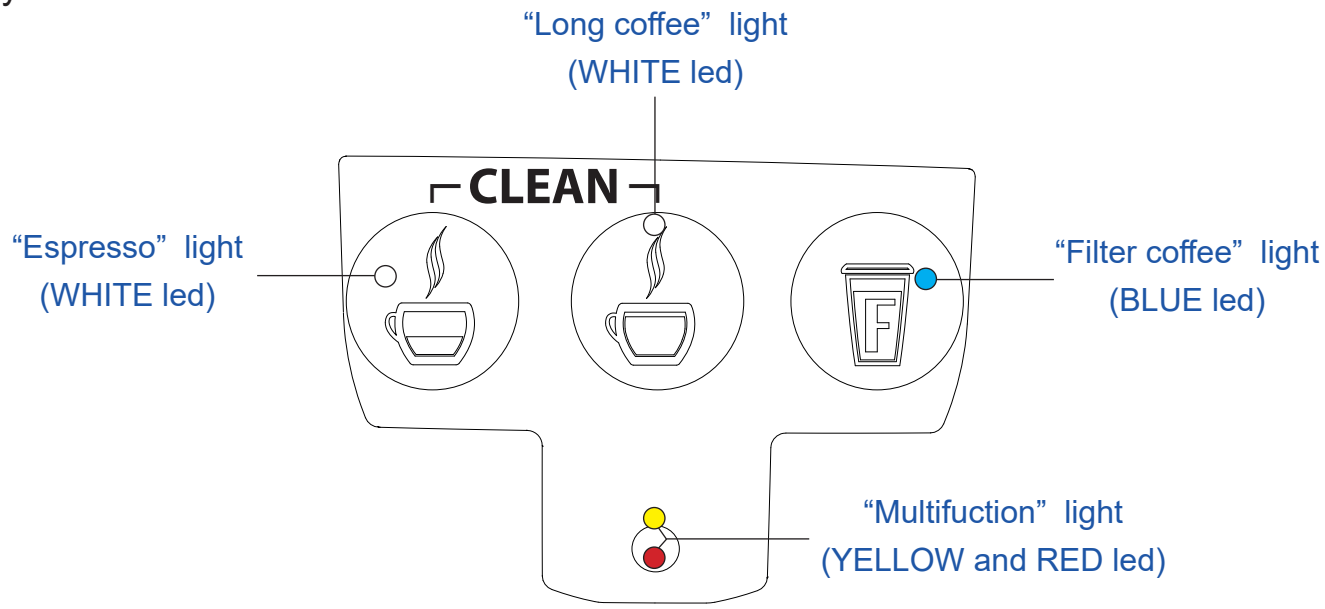

Brewing settings (nominal value ml):

35÷50	80÷120	120÷150

Keyboard PCB:
Code: 34000398600

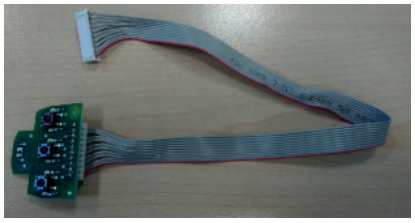

Main Power PCB:
Code: 34000674800

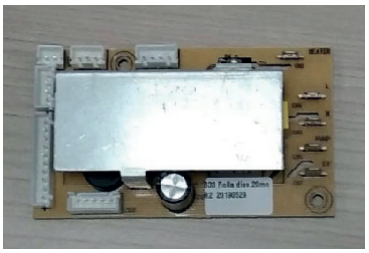

Pump:
ULKA PUMP EP5FM/SP-CEVO 2.0 230V 50HZ 15 Bar
Heater:
PRIME HEATER 230V 1400W

Power Cord :

European Schuko Power supply cord
Norms : CEE 7 - VII
Length: Approximatly 80cm from outlet

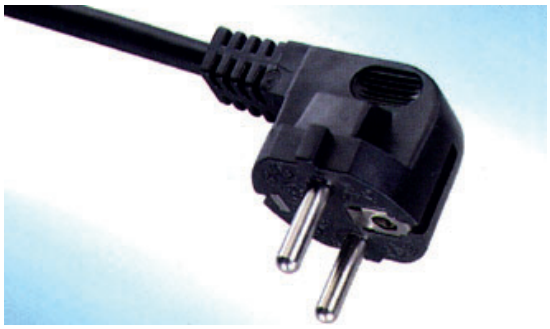

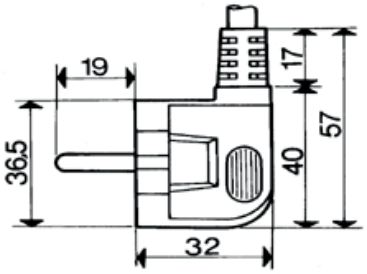

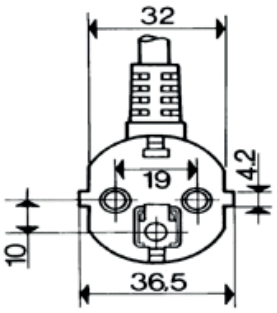

Approvals :

System		
Standard	IEC 60335-2-75	
Safety	CB 220-240V 50/60Hz	
	Dekra-Mark	
EMC	EMC	
Food Contact	Regulation 1935/2004	
	UE Regulation 10/2011	
Eco Design	ROSH 2002/95/CE	

Cleaning (DUMMY) capsule kit :

Code: 340004279A1

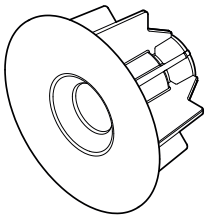

Gift Box :

Code: GB3600400

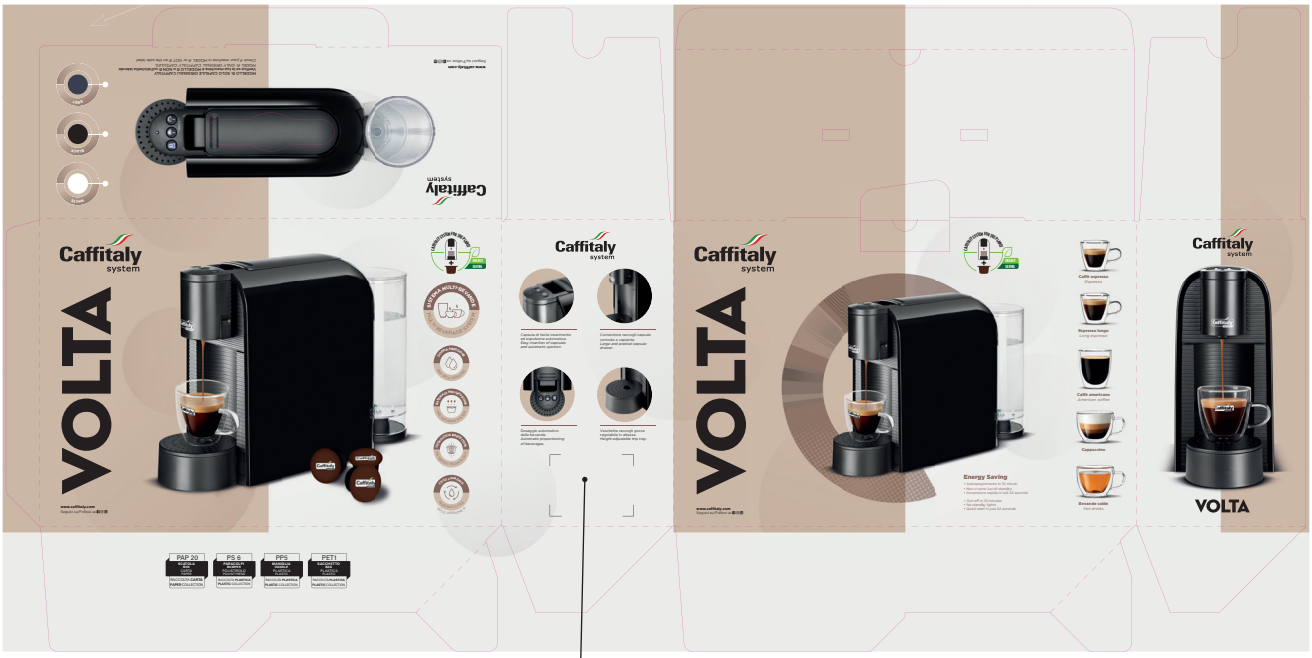

Gift box labels

Master Carton :

Master Carton (for 2 pieces)

Code: MC3300100

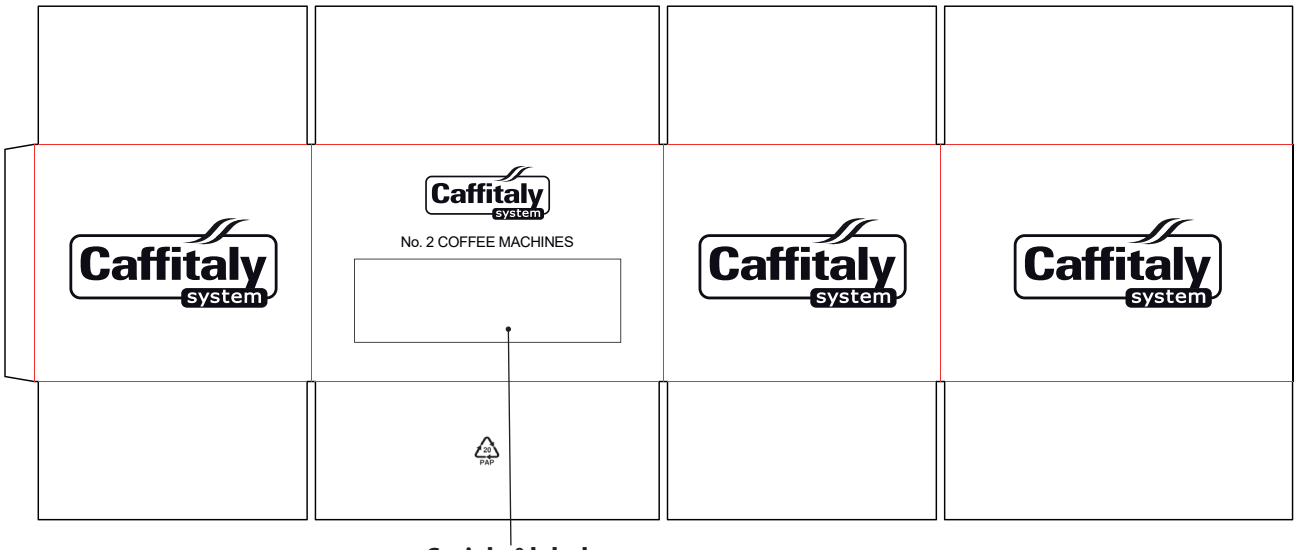

Serial n° labels

Caffitaly system	Product specification **S36 VOLTA Caffitaly System**	File Name: **PS360020911**

User Manual :

Code: IB3600100 Rev : 01
Size : A5
Languages (in order) :
Italian - English - German - French - Spanish - Portuguese - Dutch

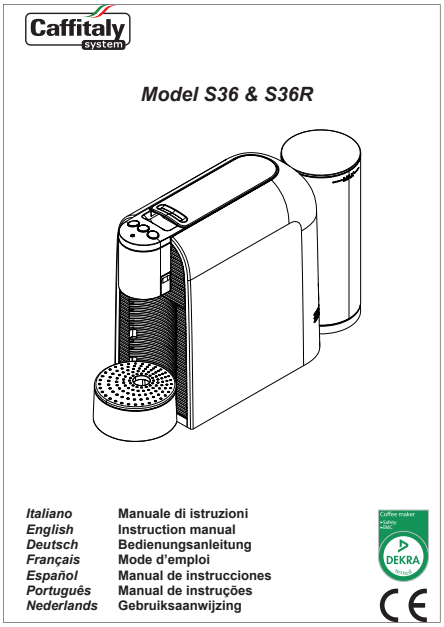

Warranty card :

Code: CW0000100 Rev : 03
Size : A5
Languages (in order) :
Italian - English - German - French - Spanish - Portuguese - Dutch

